SERVICE MANUAL

Hydraulic Motors type MTM…
and MLHTM…

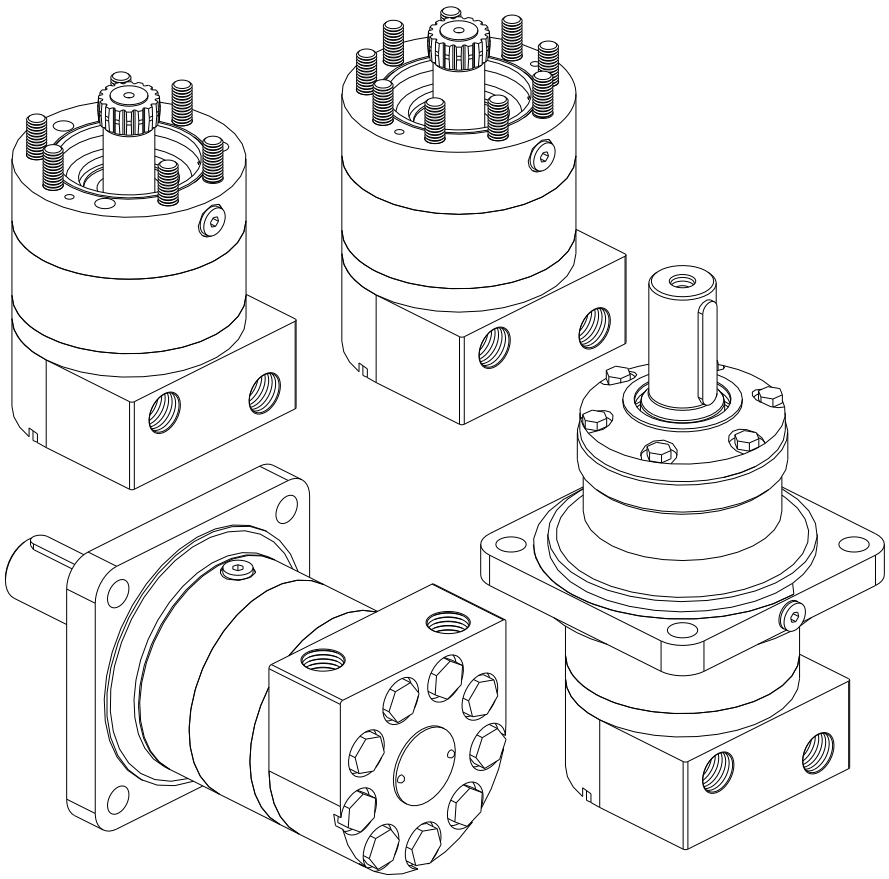

2008

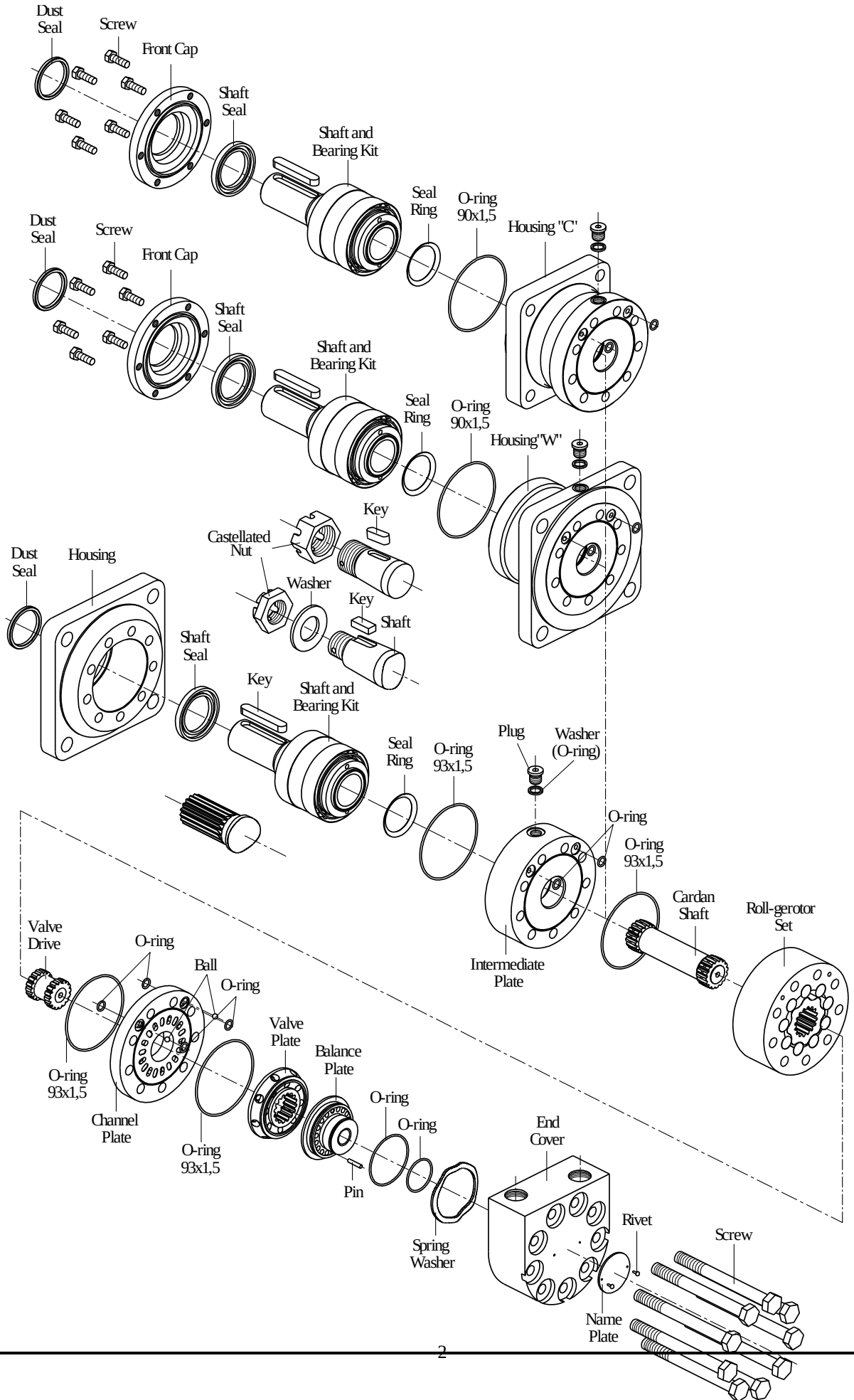
Dust Seal
Screw
Front Cap
Shaft Seal
Shaft and Bearing Kit
Seal Ring
O-ring 90x1,5
Housing "C'
Dust Seal
Screw
Front Cap
Shaft Seal
Shaft and Bearing Kit
Seal Ring
O-ring 90x1,5
Housing"W"
Key
Castellated Nut
Washer
Key
Shaft
Dust Seal
Housing
Shaft Seal
Key
Shaft and Bearing Kit
Seal Ring
O-ring 93x1,5
Plug
Washer (O-ring)
O-ring
O-ring 93x1,5
Cardan Shaft
Roll-gerotor Set
Intermediate Plate
Valve Drive
O-ring
Ball
O-ring
O-ring 93x1,5
Channel Plate
O-ring 93x1,5
Valve Plate
Balance Plate
Pin
O-ring
O-ring
Spring Washer
End Cover
Rivet
Screw
Name Plate

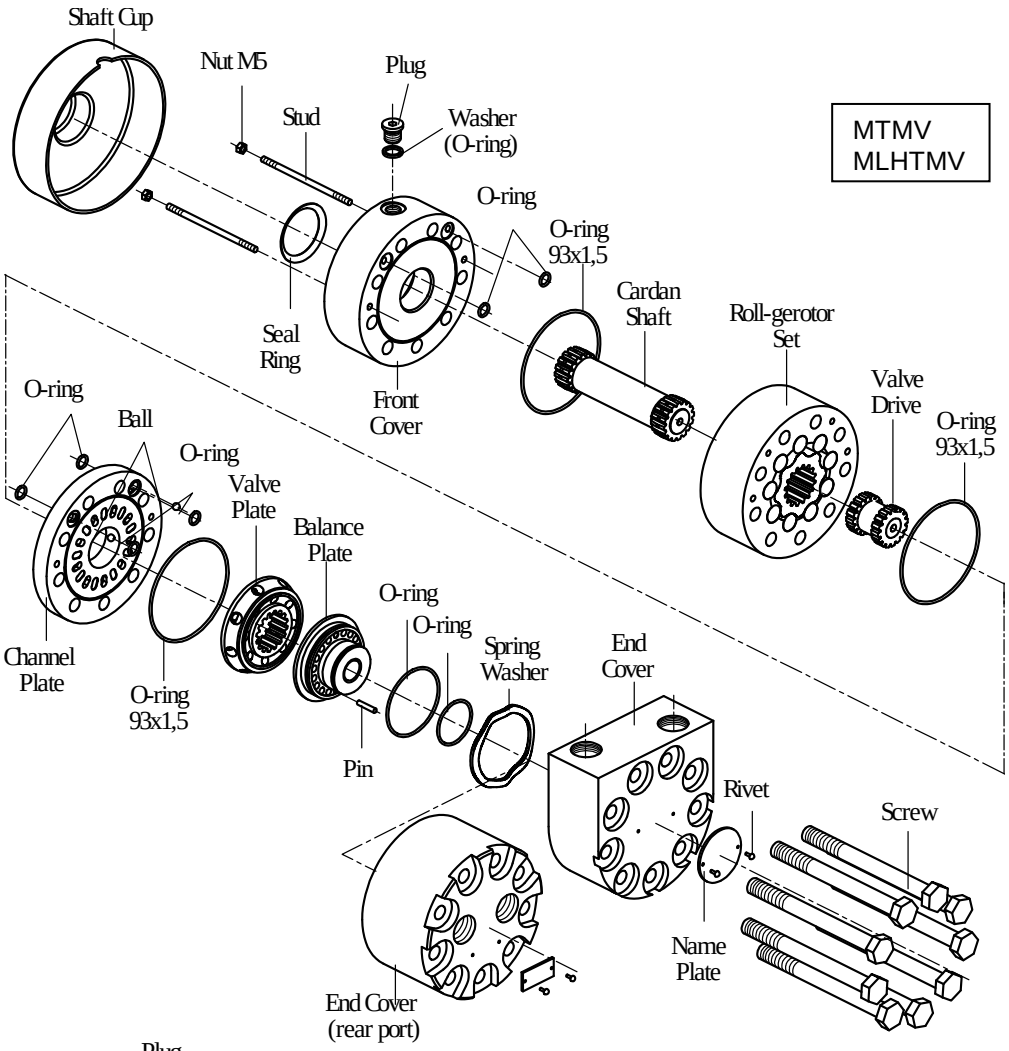
MTMV
MLHTMV
Shaft Cup
Nut M5
Plug
Stud
Washer
(O-ring)
O-ring
O-ring
93x1,5
Cardan
Shaft
Roll-gerotor
Set
Seal
Ring
Front
Cover
Valve
Drive
O-ring
93x1,5
O-ring
Ball
O-ring
Valve
Plate
Balance
Plate
O-ring
O-ring
Spring
Washer
End
Cover
Channel
Plate
O-ring
93x1,5
Pin
Rivet
Screw
Name
Plate
End Cover
(rear port)

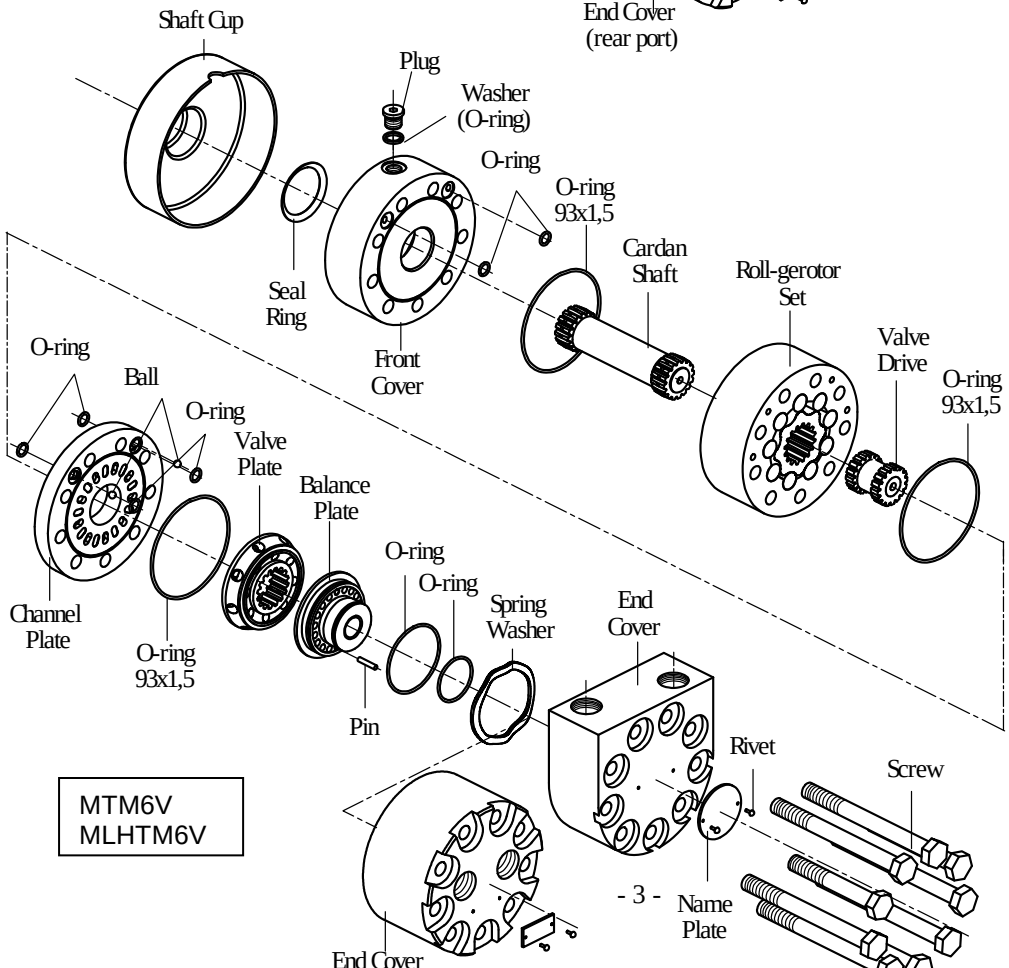
Shaft Cup
Plug
Washer
(O-ring)
O-ring
O-ring
93x1,5
Cardan
Shaft
Roll-gerotor
Set
Seal
Ring
Front
Cover
Valve
Drive
O-ring
93x1,5
O-ring
Ball
O-ring
Valve
Plate
Balance
Plate
O-ring
O-ring
Spring
Washer
End
Cover
Channel
Plate
O-ring
93x1,5
Pin
Rivet
Screw
MTM6V
MLHTM6V
Name
Plate
End Cover

The instructions in this manual concern motor types MTM and MLHTM.

Cleanliness is extremely important when repairing these motors. Work on clean surface!

Before disassembly, drain the oil from the motor and dry the working bench.

If there are castellated nut, washer or key, they have to be removed from the shaft.

Although not all drawings show the motor in disassembly devise (vice with soft clamping jaws), we recommend the motor to be tightened during disassembly.

1. Unscrew the Drain plug with S6 Allen key and remove the washer (O-ring for MLHTM) from Intermediate plate.

2. Place the motor in disassembly devise with output shaft down.

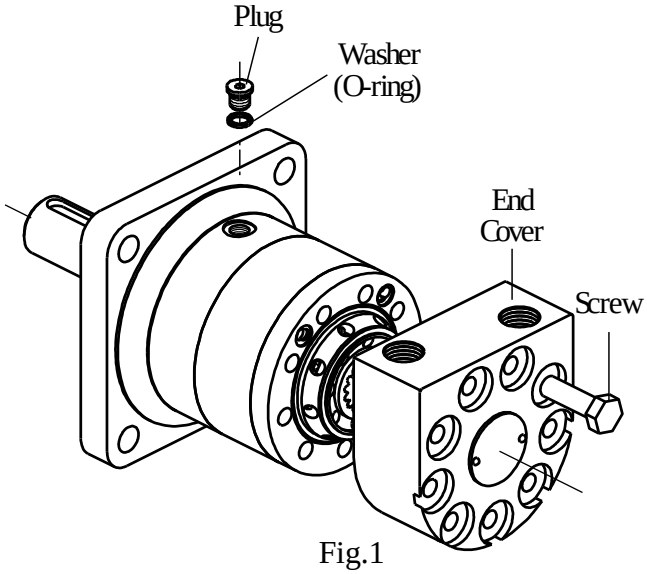

Fig.1

3. Unscrew screws using a S19 torque wrench. (see Figure 1)

4. Remove end cover assembly.

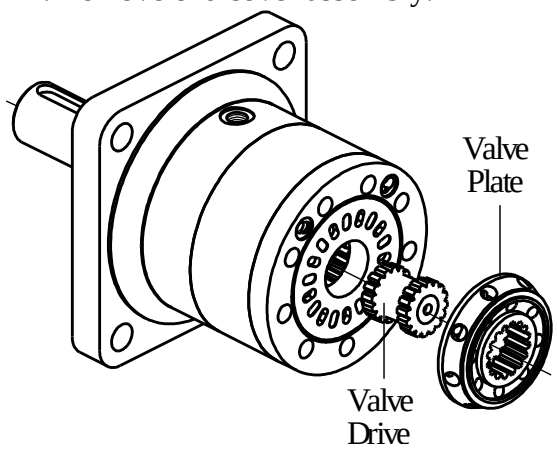

Fig.2

5. Separate Valve Plate from Channel Plate and remove Valve Drive (see Fig.2).

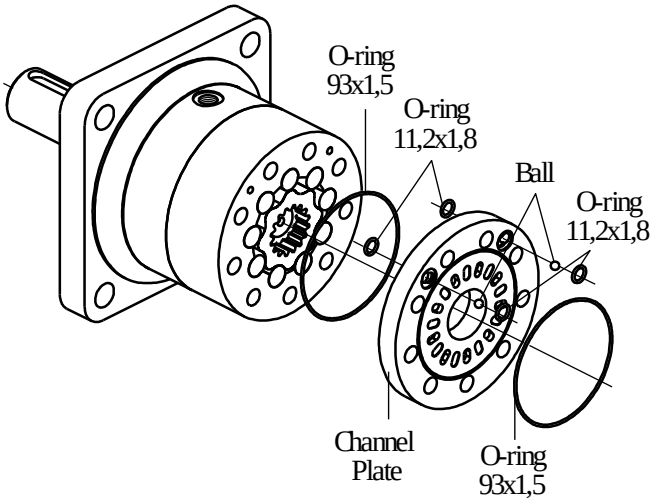

Fig.3

7. Separate Channel Plate from Roll-gerotor set (see Fig.3).

8. Remove O-ring 93x1,5 (2 psc.), O-ring 11,2x1,8 (4 psc.) and balls (2 psc.) from Channel Plate grooves.

9. Remove the roll-gerotor set carefully to prevent dropping of rollers and rotor from stator. Do not dismount!

10. Remove cardan shaft from the splines of output shaft (see Fig.4).

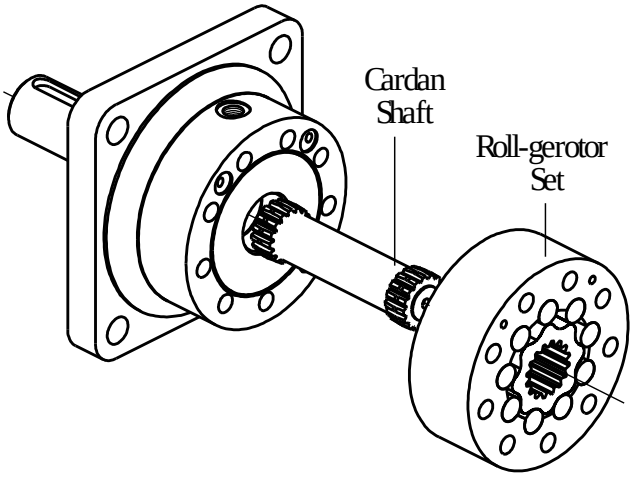

Fig.4

11. Separate Intermediate Plate from housing. Remove from plate's grooves O-ring 93x1,5 (2 psc.) and O-ring 11,2x1,8 (2 psc.). Remove Seal Ring from Intermediate Plate. (see Fig.5).

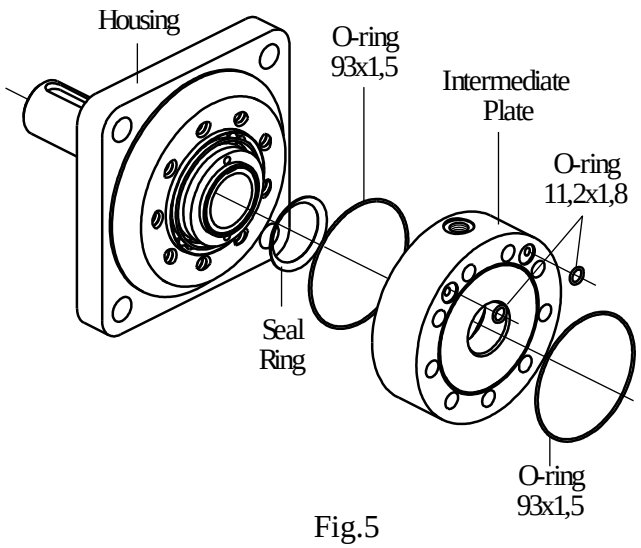

Fig.5

12. Fix Housing in a hydraulic press and push output shaft with bearing kit out of housing (see Fig.6).

Note: Replace Output Shaft and bearing kit as a unit. If not necessary do dismount the bearing kit!

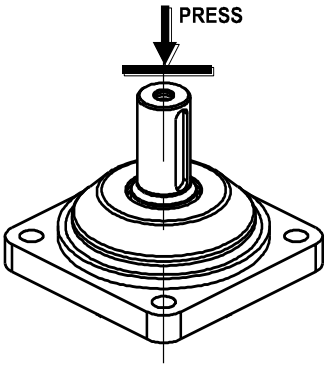

Fig.6

13. Remove with small screwdriver Dust Seal and Shaft Seal from housing (see Fig.7).

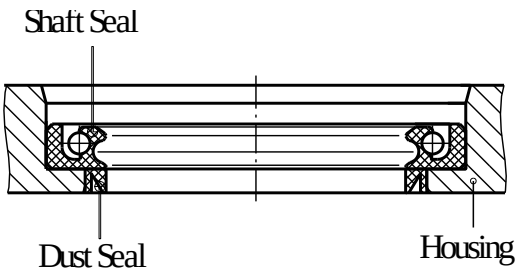

Fig.7

End Cover Disassembly:

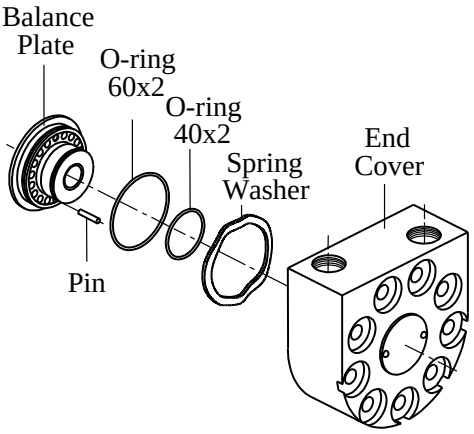

Fig.8

14. Turn the end cover with the hole conversely on a clean soft surface. Knock several times using a plastic hammer on the rear side. Set in order the fallen parts apart (see Fig.8).

15. Remove O-rings 62x2 and 40x2 from the grooves of the balance plate.

16. Remove the pin using a vice with soft jaws or pliers knocking on the balance plate and swivelling it round the pin simultaneously.

Seal Kits:

SK 41 5129 1360 for MTM…
SK 41 5129 1381 for MTMW (C)…
SK 41 5129 1353 for MTM (6)V…
SK 41 5124 6100 for MLHTM…
SK 41 5124 6156 for MLHTMW…
SK 41 5123 8980 for MLHTMV…

1. CLEANING:

Wash all parts (except seals) in a weak solvent on carbon base and then degreased.

2. MEASURING AND REPLACEMENT:

Measure all parts and compare their actual dimensions with the nominal ones given in the technical documentation. Replace any parts with scratches or burrs that could cause leakage

or damage with new ones. Use new seals and washers when reassembling the motor.

3. LUBRICATION:

Lubricate all frictioning parts, which should be reassembled with light film of petroleum jelly.

Place housing on clean soft surface.
Lubricate shaft seal and dust seal with light film of clean petroleum jelly.

1. Place shaft seal in housing and firmly push with Seal driver (see Fig.9).

2. Install dust seal in housing. Carefully press dust seal into place.

Lips of shaft seal and dust seal must face outward.

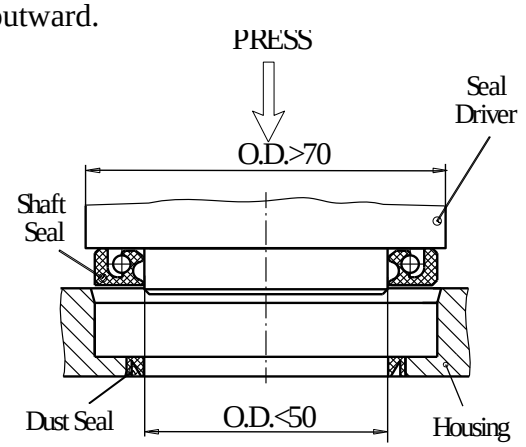

Fig.9

Important: Check seal condition after installing in housing. If damaged, cut or improperly installed, replace with new ones.

3. Place the housing in reassembly device (vice).

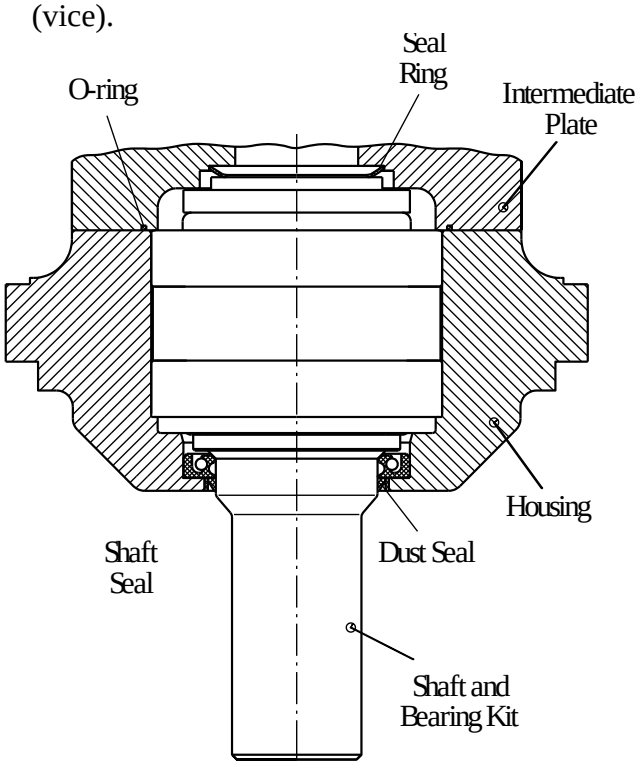

Fig.10

4. Use a press to install output shaft with bearing kit into housing (see Fig.10).

Alignment studs can be very helpful in reassembly of the motor. Install two studs M12x200 diagonally in the housing.

5. Lubricate O-rings 93x1, 5 (2 psc.) and place them in seal grooves of both sides of Intermediate Plate. (see Fig.5).

6. Install the seal ring in the Intermediate Plate as it is shown on figure 10.

7. Install the Intermediate Plate (see Fig.11).

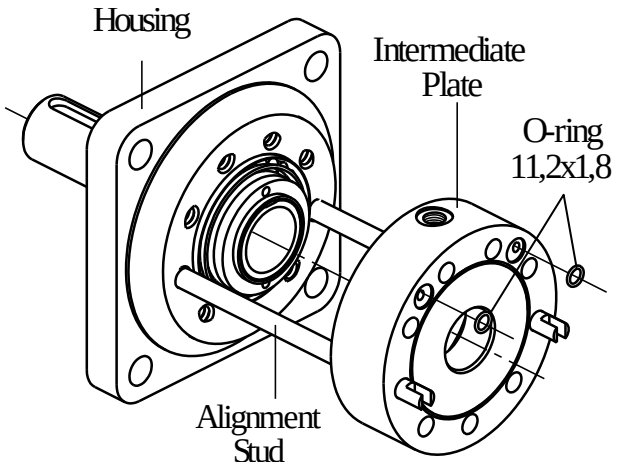

Fig.11

8. Lubricate and install 2 psc. O-rings 11,5x 1, 8 in the seal grooves of intermediate plate.

9. Install the cardan shaft into splines of the output shaft.

Timing Procedure

10. Orientate the roll-gerotor set acc.to Fig.12 and assemble the rotor splines into the cardan shaft splines. (If necessary, turn the shaft to one or another direction for keeping symmetry of rotor towards stator.)

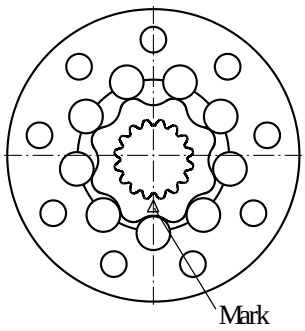

Fig.12

11. Install the valve drive into the rotor spline sector.

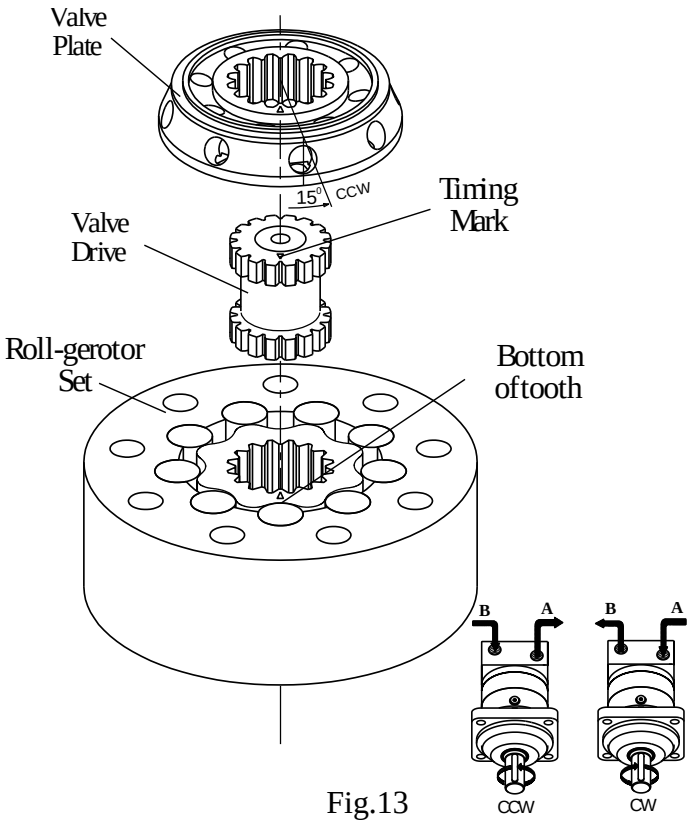

Fig.13

12. Mark the rotor at the point where the tip of a spline tooth is opposite to the bottom of a tooth in the external rotor teeth as shown on Fig.12 and 13.

13. Mark the bottom of a spline on the valve drive. Line up mark on rotor and valve drive.

14. Lubricate and install 2 psc. O-rings 11,5x1, 8 in channel plate seal grooves, seal side toward roll-gerotor set.

Lubricate O-rings 93x1,5 (2 psc.) and place them in seal grooves of both sides of Channel Plate. (see Fig.5).

15. Lubricate the roll-gerotor set surface and place on it the channel plate. Lubricate and install 2 psc. Balls and 2 pcs. O-rings 11,5x1, 8 in channel plate seal grooves.

Note: Intermediate plate, Roll-gerotor set and Channel plate to be orientated each other in a way that the channels, for the built check valve, to coincide!

16. Align mark on valve drive with a hole in the outer rim of the Valve Plate. Turn Valve Plate clockwise (as shown on Fig.13) until splines in the two parts engage / rotation about 15°/.

Reverse Rotation:

Reverse rotation is obtained by rotation of the Valve Plate counter clockwise (as shown on Fig.13A) until splines in the two parts engage.

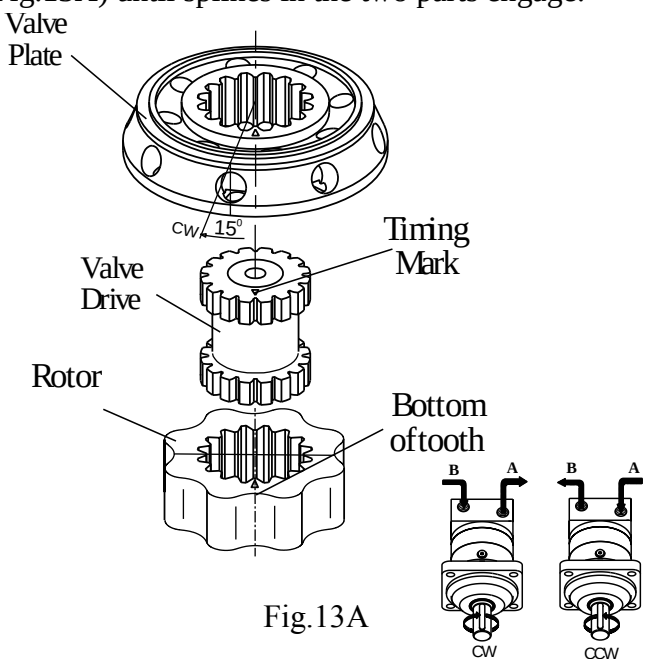

Fig.13A

Reassembly of End Cover:

19. Mount the lubricated O-rings 62x2 and 40x2 in the relevant grooves of the balance plate (see Fig.8).

20. Stave the preliminarily lubricated pin into the balance plate hole (to the thin end).

21. Place the cover with the front for nameplate downwards. Lubricate lightly all internal cap surfaces to protect seals. Put the spring washer into hole with passing diameter.

22. Place the balance plate (set) inside the end cover with the pin orientated to fall in with the hole of its bottom. Use a plastic hammer.

Parts are correctly assembled when at pressing the front surface of balance plate by thumbs downwards, the balance plate jumps up itself as a result of spring force.

23. Mount the end cover (set) carefully over both alignment studs. Make sure that the port face of end cover coincides with the orientated intermediate plate (respectively drain port).

24. Install the screws in End cover. Tighten screws with 75÷80 Nm torque using a S=19 mm torque wrench in sequence as shown in Fig.14

Remove the alignment studs and replace with the two remaining bolts.

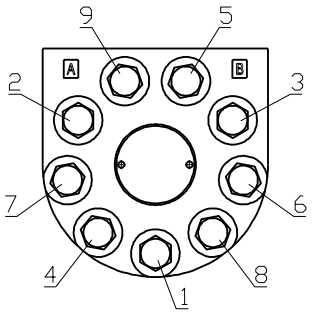

Fig.14

25. Install washer (O-ring for MLHTM...4) on drain plug. Tighten plug with Allen key S6 with torque 2,0 ÷ 2,5 daNm.

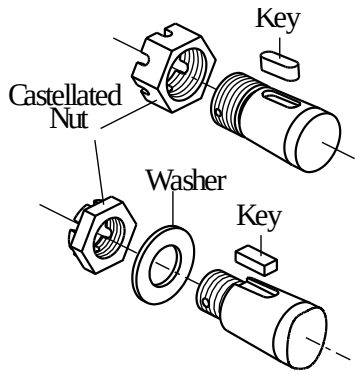

Fig.15

26. Install key in shaft key groove. For cone shafts install washer and screw castellated nut (see Fig.15).

Disassembly and reassembly of "W" and "C" – flange motors:

On these motors are used different Front cap and Housing (see Fig.16). The Front cap is mounted to housing with 6 psc. Screw M8x25. At reassembly tighten screws with 2,5-3 daNm torque using a S=13 torque wrench. Except these ones, all other parts are the same as for the standard motor and the same procedures of disassembly and reassembly are applied.

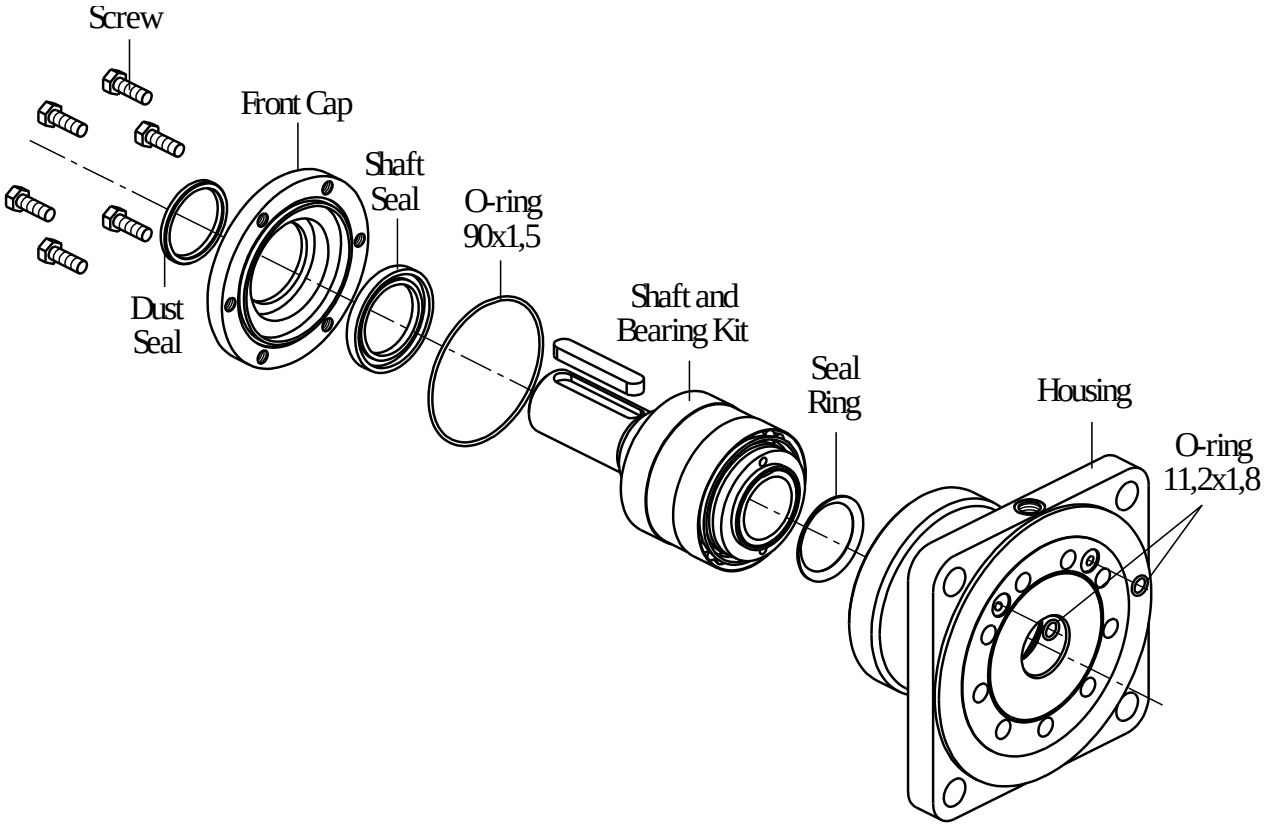

Fig.16

Disassembly and reassembly of short (without bearings) motors type "V" and "6V":

These motors are the same as the standard motors without bearing unit /Output shaft and Housing/ and Front cover. The Intermediate plate is replaced by Front Cover for MTMV (Housing "W" and "C"). Follow the same disassembly and reassembly procedures as for the rear section of standard motor.

For MTMV (MLHTMV) only: Front Cover is mounted to motor with 2 psc. Studs M5 and 2 psc. Nuts M5. Loosen the nuts using S8 socket spanner. Unscrew the studs.

For MTM6V (MLHTM6V) only: The screws have different lengths: three short ones and six long ones. The three short screws keep the motor part assembled. At reassembly mount the three short screws in the right holes (as shown on Fig.17) and then mount other six long screws.

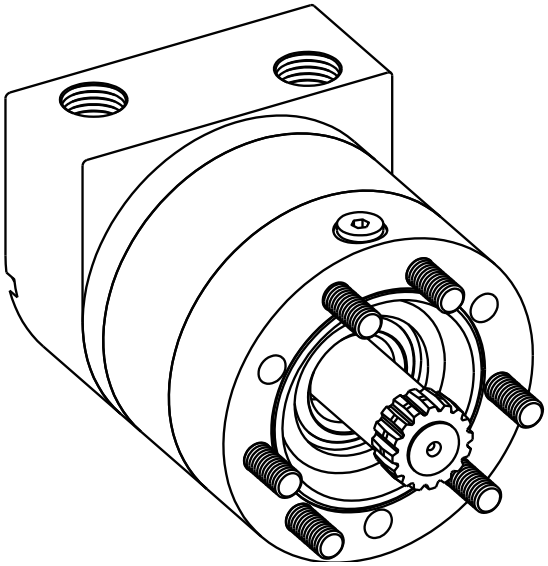

Fig.17